MANUAL NO. 14A
SOFTWARE VERSION
3.3 AND HIGHER

Model ETR-9090
Microprocessor Based
SMARTER LOGIC® Auto Tune PID Controller

INSTRUCTION MANUAL

INSTRUCTION MANUAL FOR ETR-9090

Section 1: INTRODUCTION

This manual contains information for the installation and operation of the **Ogden** Model ETR-9090 auto-tuning micro-processor based controller with Smarter Logic®.

Ease of use is an essential feature on this versatile controller. Four touch keys are used to select sensor type, control mode, control parameters, alarm mode, degrees C/F, auto-manual mode, and to lock the parameters from the prevention of unauthorized tampering. Two large 4-digit displays show process and set point values at a glance. Precise 14 slope sensor linearization, self-diagnostic capability, cold junction compensation and 3-mode PID calculations are automatically executed by the single chip microprocessor. The wide selection of parameters, values, sensor types, set points, control modes, alarm modes, degrees C/F and security codes are held in a non-volatile memory and retained for ten years if the unit is left unpowered. Batteries are not necessary.

The auto-tuning function determines the correct proportional band, rate and reset values to provide accurate control with minimal overshoot and temperature oscillation. This is accomplished without the need for expensive and time consuming procedures for set-up of control parameters. In case of a power failure or temporary shutdown, the instrument retains the correct parameters. This instrument also has manual override capabilities that allow the operator to bypass the auto-tuning parameters. Required fine tuning adjustments can then be made.

WARNING!

Failure of devices, such as the thermocouple-RTD sensor, heater output relay or temperature control can result in severe damage to a product while in process, melting of the heater or a damaging fire. An over-temperature protection device must be installed in your process that will remove all power from the heating circuit if the above failure occurs. We recommend that this device be classified as a safety control and carry FM, U.L. and CSA Listing or Certification. Failure to install high-limit temperature control protection where a potential hazard exists, could result in damage to equipment and property, and severe injury to personnel.

64 West Seegers Road
Arlington Heights, IL 60005
(847) 593-8050 • Fax: (847) 593-8062

© Ogden Manufacturing Co. 1999
OGDEN, ETR, ETR-9090 and SMARTER LOGIC are Registered Trademarks of Ogden Manufacturing Co.
MARCA REGISTRADA

Printed in U.S.A. 7/99

Specifications subject to change without notice.

Section 2: CATALOG NUMBERING SYSTEM

ETR-9090- 1 2 3

LINE ONE–SIGNAL INPUT:

1.) Thermocouple J, K, T, E, B, R, S, N
2.) RTD PT100 ohms, Alpha = 0.00385/DIN43760
3.) RTD PT100 ohms, Alpha = 0.00392/JIS
4.) Voltage - 10 to 60 mV, current or special order

LINE TWO–CONTROL OUTPUT:

1.) None
2.) Relay rated 3A/240VAC/VDC resistive, 2400VA
3.) Pulsed voltage to drive SSR, 3-32VDC
4.) Internal Triac rated 1A, 240VAC
5.) Isolated 4-20mA linear
6.) Isolated 0-20mA linear
7.) Isolated 0-10V linear
8.) Special order

LINE THREE–ALARM:

1.) With alarm relay rated 2A/240VAC
2.) No alarm

Example:
Standard Model: ETR-9090-1 2 1
Thermocouple Type J, K, T, E, B, R, S, N, heating relay, with alarm

NOTE: A “-3” after the 9090 indicates 20-32VAC/VDC operation.
A” -4” after the 9090 indicates 10-16VDC operation.

Section 3: SPECIFICATIONS

Line Voltage: 90-264 VAC, 50-60 Hz, 20-32VAC/DC and 10-16VDC available.

Input: Type: J, K, R, T, B, E, S, N thermocouple, PT100 ohm RTD (DIN) 43760/BS1904 or JIS) and –10 to 60mV (given span).

Power consumption: Less than 5VA.

Accuracy: ±.1%, ± least significant digit.

Maximum Temperature Ranges:

Sensor	Input Type	Max. Range F°	Accuracy F°	Max. Range C°	Accuracy C°
J	Iron/Constantan	–58 to 1832°F	±3.6°F	–50 to 1000°C	±2°C
K	Chromel/Alumel	–58 to 2500°F	±3.6°F	–50 to 1370°C	±2°C
T	Copper/Constantan	–454 to 752°F	±3.6°F	–270 to 400°C	±2°C
E	Chromel/Constantan	–58 to 1382°F	±3.6°F	–50 to 750°C	±2°C
B	Pt-30%RH/Pt-6% RH	32 to 3272°F	±5.4°F	0 to 1800°C	±3°C
R	Pt-13%RH/Pt	32 to 3182°F	±3.6°F	0 to 1750°C	±2°C
S	Pt-10%RH/Pt	32 to 3182°F	±3.6°F	0 to 1750°C	±2°C
N	Nicrosil/Nisil	–58 to 2372°F	±3.6°F	–50 to 1300°C	±2°C
RTD	PT 100 ohms (DIN)	–328 to 752°F	±0.72°F	–200 to 400°C	±0.4°C
RTD	PT 100 ohms (JIS)	–328 to 752°F	±0.72°F	–200 to 400°C	±0.4°C
Linear	Voltage or Current	–1999 to 9999	±0.05%	–1999 to 9999	±0.05%

SPECIFICATIONS

Operating ambient for rated accuracy:	14-120°F (-10 to 50°C)
Storage Temperature:	-4 to 160°F (-20 to 70°C)
Humidity:	5 to 90%RH (non-condensing
Dimensions:	Front panel: H-1⅞" (48mm) W-1⅞" (48mm) D-3¾" (95mm) Depth behind panel: 3⅜" (86mm)
Panel cutout:	1 25/32" x 1 25/32" (45 x 45mm)
Weight:	7 oz. (198 grams)
Normal mode rejection:	60dB
Common mode rejection:	120dB
Thermocouple break protection:	Operator selectable
Display:	Process .4" red LED Set point .3" green LED
Display update rate:	4 times per second
EMC Emission:	EN500081-1, EN55011
EMC Immunity:	IEC801-2, 801-3, IEC801-4
°F/°C:	External keypad selection
Auto/Manual operation:	External keypad selection
Linearization:	Software driven
Outputs:	Heating and/or alarm
Output modules	
–Current output:	4-20mA isolated, max. load 500 ohms
–Voltage output:	0-10V isolated, minimum impedance 500K ohms
–Pulsed voltage:	24VDC, unisolated max. current 20mA
–Relay:	3A/240V, Resistive load for heating, 2A/240V, Resistive load for alarm.
Control Action:	Heating (relay closed on temperature rise) or cooling (relay open on temperature rise) front panel selectable.

NON-VOLATILE MEMORY
- Retains process parameters when power is off

EXTERNAL LOCKOUT CODE
- Prevents accidental or unauthorized changes

AUTOMATIC TUNING
- Eliminates complicated and time consuming manual tuning procedures
- Smarter Logic practically eliminates overshoot and temperature variations

STATUS INDICATORS
- Indicate output and alarm condition
  CON: Control Output
  ALM: Alarm Output

SET POINT DISPLAY VALUE
- All control parameter and set points displayed
- Output Percentage
- Calibration parameters

4 PUSHBUTTONS
- For ease of control set-up

TOUCH KEY, Sealed mylar front panel
- Splash and chemical resistant
- Tactile feedback, pressure sensitive buttons

MODEL ETR-9090

WARNING!

RISK OF ELECTRIC SHOCK - Dangerous and potentially fatal voltages are present when working on this equipment. Before installation or beginning any troubleshooting procedures, the electric power to this equipment must be disconnected and locked out as described by OSHA Standards. Units suspected of being faulty must be removed and returned to Ogden for inspection and/or repair. They contain no user serviceable components.

WARNING!

To help minimize the possibility of fire or shock hazards, do not expose this instrument to rain or excessive moisture. This control is not to be used in hazardous locations as defined in Articles 500 and 505 of the National Electric Code.

CAUTION!

Do not use this instrument in areas subject to hazardous conditions such as excessive shock, vibration, dirt, moisture, corrosive gases or oil. The ambient temperature of the areas should not exceed the maximum rating specified in Section 3, on previous page.

Unpacking:

Upon receipt of the shipment remove the instrument from the carton and inspect the unit for shipping damage. If any damage due to transit is noticed, report and file a claim with the carrier. Write down the model number, serial number, and date code for future reference when corresponding with our service center. The serial number (S/N) and date code (D/C) are located inside the control.

Mounting:

Make panel cutout to dimensions shown below. Insert the controller into the panel cutout. The maximum panel thickness is ⅛" (3mm).

Wiring Precautions:

- Before wiring, verify the label for correct model number and options. Switch off the power when checking.
- Care must be taken to ensure that maximum voltage ratings specified in Section 3 on previous page are not exceeded.
- It is recommended that power to these instruments be protected by fuses and circuit breakers rated at the minimum value possible.
- All units should be installed inside a suitably grounded metal enclosure to prevent live parts being accessible to human hands and metal tools.
- All wiring must conform to appropriate standards of good practice, national and local codes and regulations. Wiring must be suitable for the maximum voltage, current, and temperature ratings expected in the system.
- Both solderless terminals or “stripped” leads as specified in Figure 4.2 below can be used for power leads. Only “stripped” leads should be used for thermocouple connections to prevent compensation and resistance errors.
- Take care not to over-tighten the terminal screws.
- Unused control terminals should not be used as jumper points as they may be internally connected, causing damage to the unit.
- Verify that the ratings of the output devices and the inputs as specified in Table 4.2 on Page 8 are not exceeded.
- Electric power in industrial environments contains a certain amount of noise in the form of transient voltages and spikes. This electrical noise can enter and adversely affect the operation of microprocessor-based controls. For this reason we strongly recommend the use of shielded thermocouple extension wire which connects from the sensor to the controller. This wire is a twisted-pair construction with foil wrap and drain wire. The drain wire is to be attached to earth ground at the control end only. We carry both type J and type K in our stock.

NOTE: The use of motor starters in place of magnetic contactors should be avoided. They have very large inductive loads that can damage the controller’s relay.

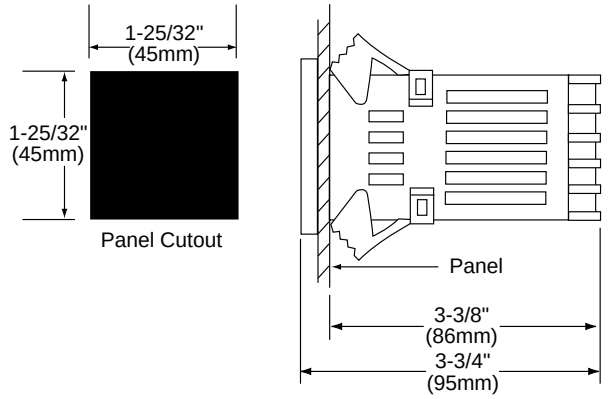

Figure 4.1 Mounting Dimensions

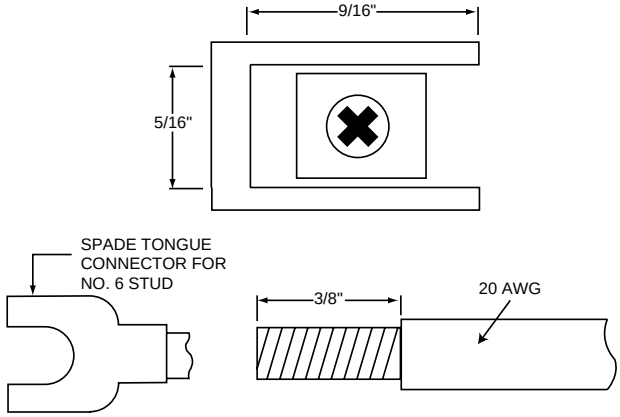

Figure 4.2 Lead Termination

Power Wiring:
Connect terminals as shown in Figure 4.3. The power switch S1 and Fuse F1 are included for illustrative purpose only. All wiring must conform to national and local electrical codes. Refer to Figures 4.4, 4.5 and 4.6 on following pages for sample wiring diagrams.

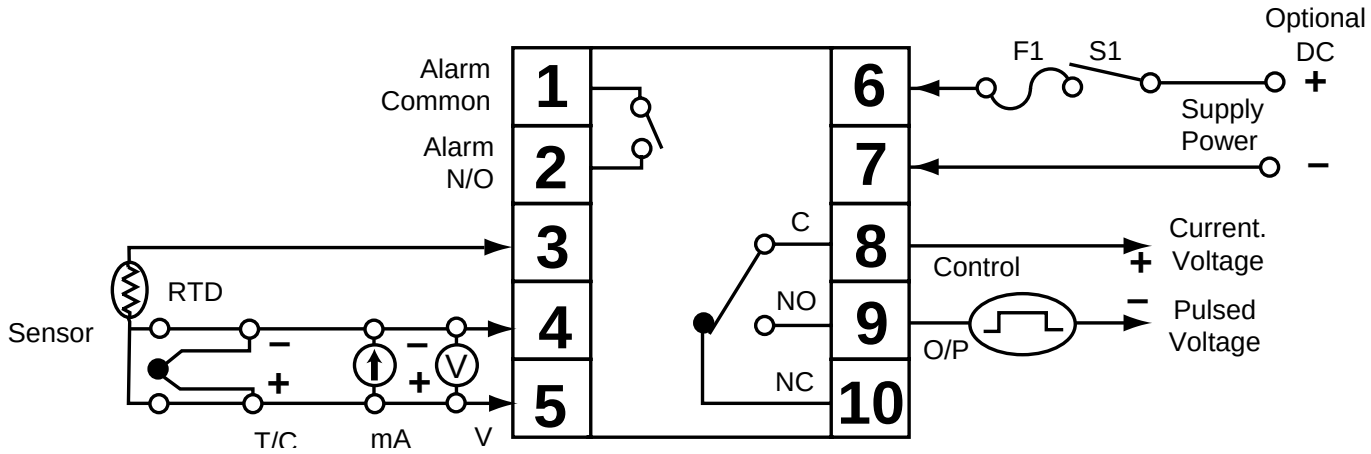

Figure 4.3 Rear Terminal Connections

Input Wiring:
Connect appropriate sensors to terminals 3, 4, or 5 as illustrated in Figure 4.3 above. Verify that the instrument is selected for the correct sensor and the correct polarity is observed at both the sensor-end and instrument-end of the cable. Do not run sensor cables in the same conduit or wiring trough as power lines because the low level signal is noise sensitive.

When wiring the thermocouple, check the thermocouple and extension wire (compensating cable) to make sure they conform to the appropriate thermocouple type specified by the instrument. Extension wires must be the same alloy and polarity as the thermocouple. The total lead resistance should not exceed 100 ohms for accurate measurements. One hundred ohms of lead resistance will introduce a 1°F (0.5°C) error.

For wiring 3 wire RTD (Resistance Temperature Detector) all leads connecting the RTD to the controller must be the same gauge and material. If the RTD is a 3 wire device, install the two common wires of the RTD to terminals 4 and 5. If a 2 wire RTD is to be used, install a jumper between terminals 4 and 5.

Table 4.1 Thermocouple Cable Color Codes

Thermocouple Type	Cable Material	American ANSI	British BS 1843	German DIN 43710	French NFE 18001
J	Iron/Constantan	+ white - red * black	+ yellow - blue * black	+ red - blue * blue	+ yellow - black * black
K	Chromel/Alumel	+ yellow - red * yellow	+ brown - black * red	+ red - green * green	+ yellow - purple * yellow
T	Copper Constantan	+ blue - red * blue	+ white - blue * blue	+ red - brown * brown	+ yellow - blue * blue
R S	Platinum/Rhodium	+ black - red * green	+ white - blue * green	+ red - white * white	+ yellow - green * green
B	Platinum/Rhodium	+ grey - red * grey		+ red - grey * grey	

* Color of overall sheath

Chromel® and Alumel® are registered trademarks of Hoskins Mfg. Co.

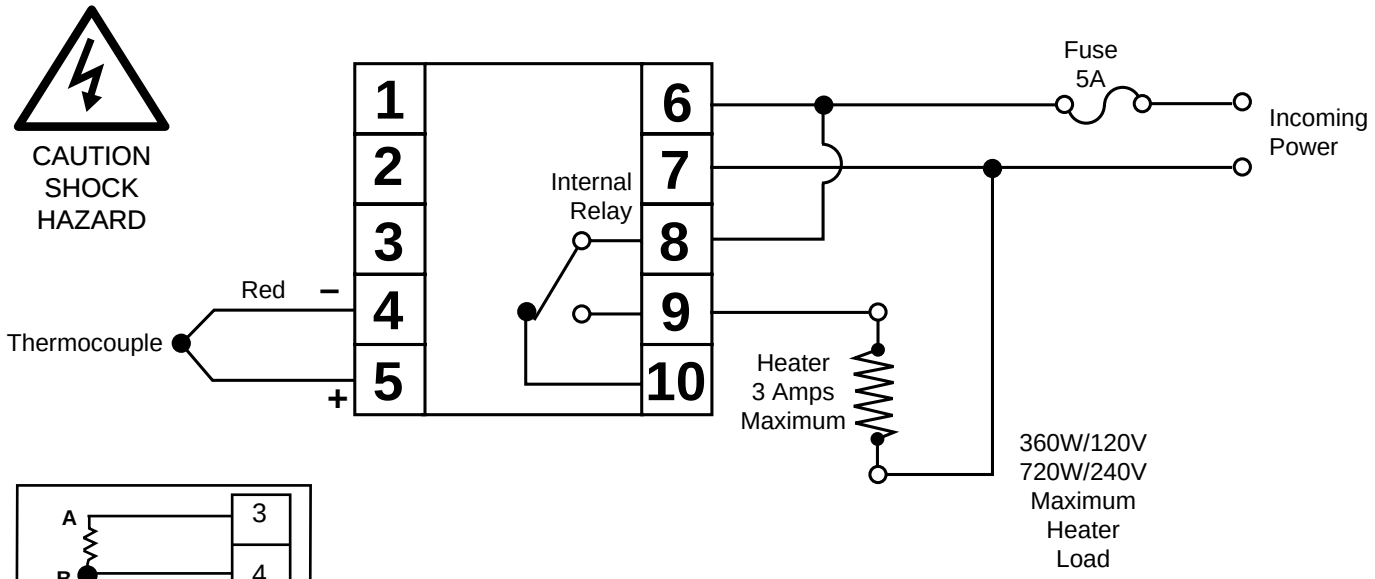

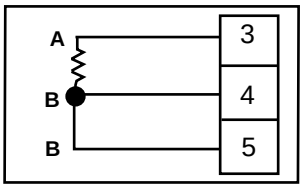

RTD Sensor Connections

Figure 4.4
Example of wiring connections for
ETR-9090-122 with Relay Output.

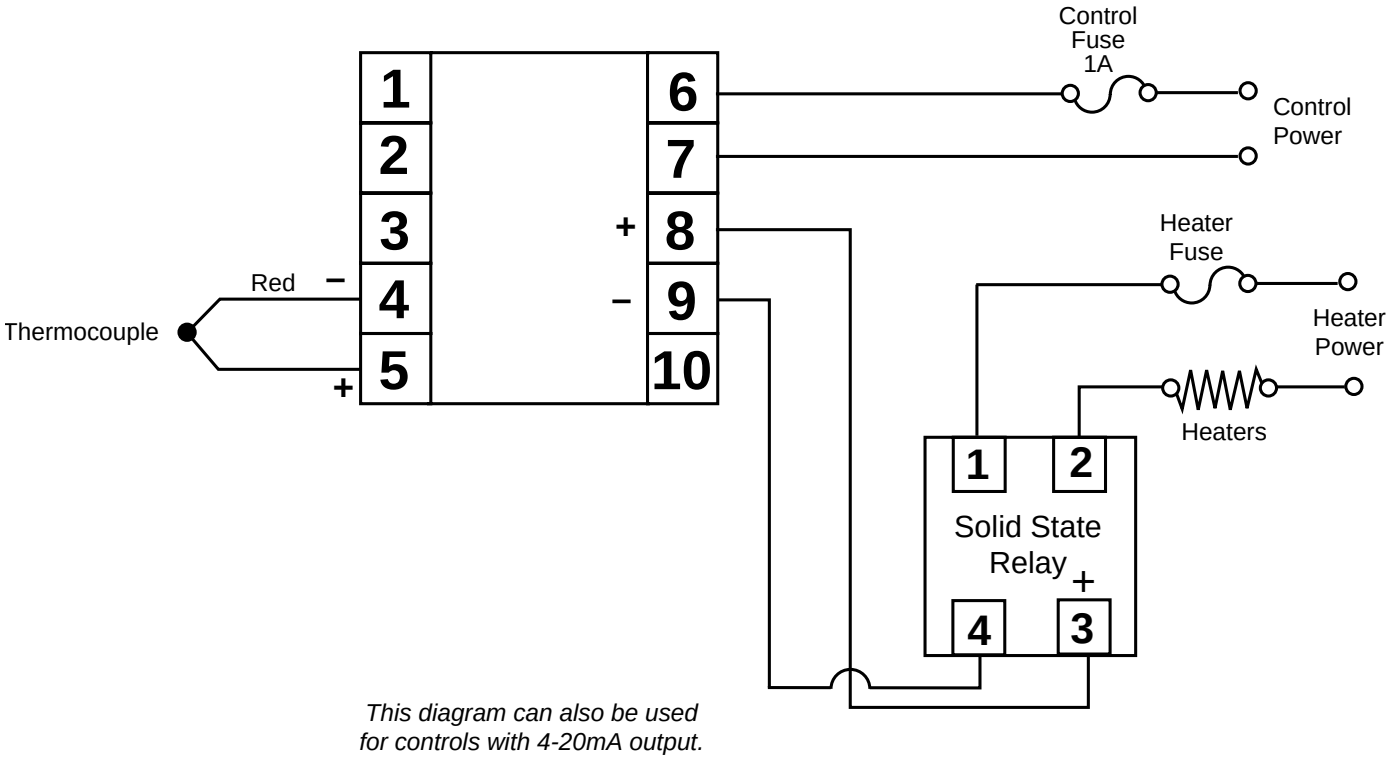

This diagram can also be used
for controls with 4-20mA output.

Figure 4.5
Example of wiring connections for
ETR-9090-132 with Pulsed Voltage Output
for Solid State Relay

Note control label for incoming power requirements.

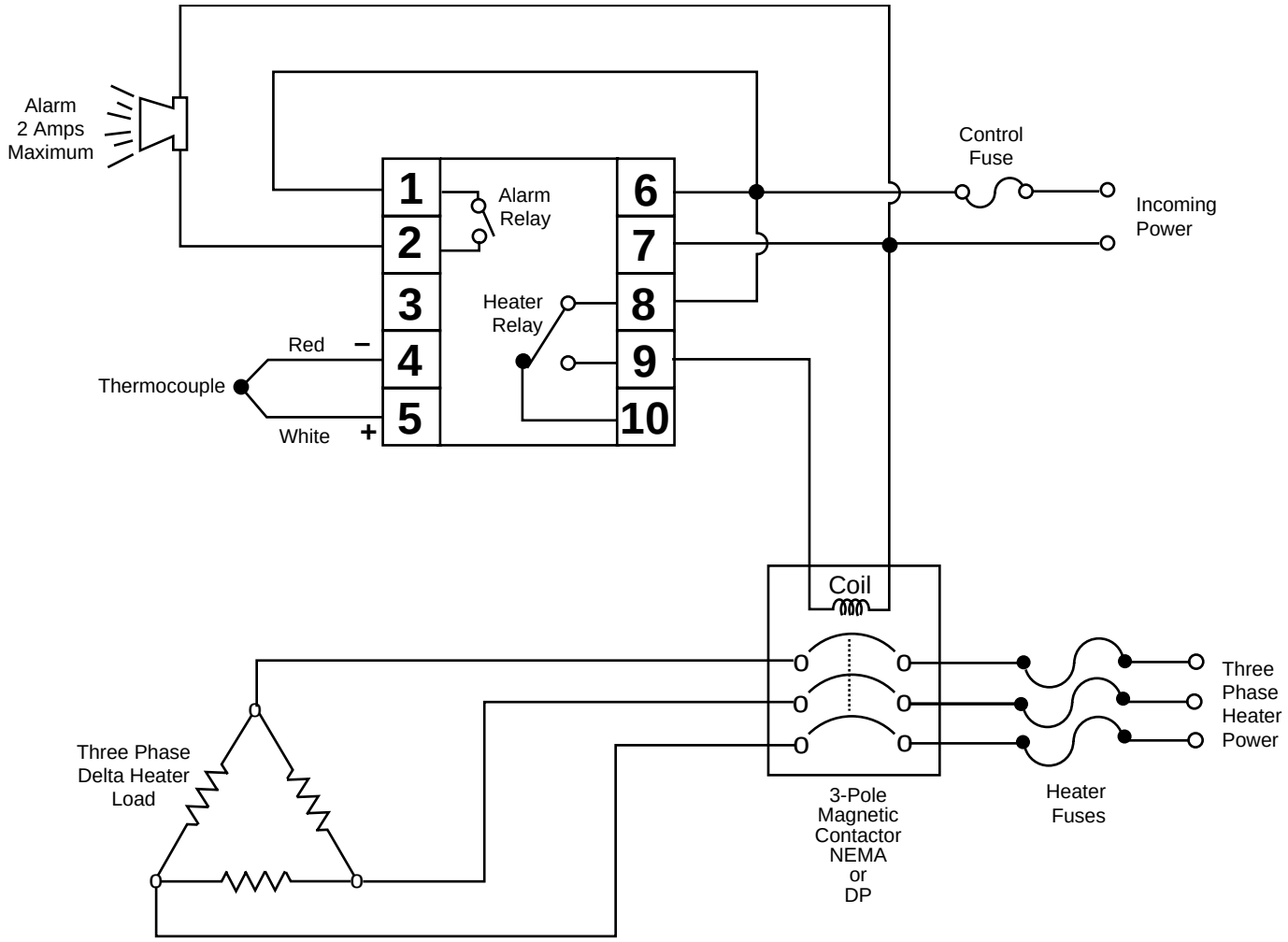

Figure 4.6
ETR-9090-121 with Relay Output.
Heaters connected in 3-Phase to Contactor.
With Alarm option.

Note control label for incoming power requirements.

Table 4.2 Heating Output Wiring

Function	Internal Device: Terminals:	External Connection:
1. Relay (Isolated). Relay contact is closed during ON phase of output cycle. (CTRL lamp ON)	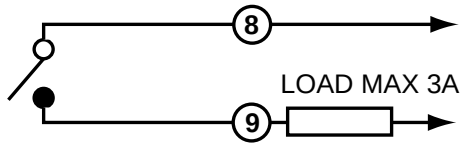	To line 240VAC max.
2. Current (Isolated. Reverse acting current (The function of CTRL lamp ON lasts longer during decreasing process value).	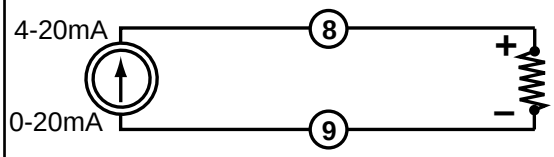	Input impedance of control device, MAX. 500 ohms.
3. Voltage (Isolated). Reverse acting voltage (The Flashing of CTRL lamp ON lasts longer during decreasing process value).	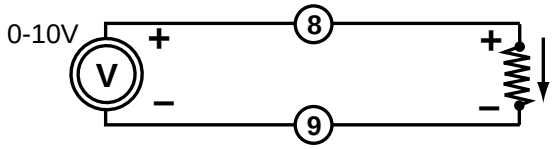	Input impedance of control device, MIN. 500K ohms.
4. Pulsed Voltage. The non-isolated logic signal goes high during ON phase of output cycle. (CTRL lamp ON).	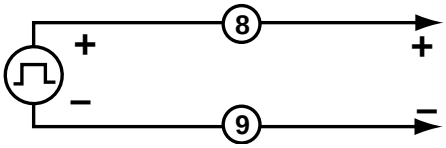	To drive solid state relay or other isolated control device 24 VDC/20mA MAX.

Output Wiring:
Four different types of output devices can be used from output one. Relay, current, voltage and pulsed voltage provide a variety of control applications, Verify that the output device is correctly selected to meet your application requirements and make certain the ratings of the output devices are not exceeded before wiring the system.

The external connections depend on what type of output is installed. Pulsed voltage output is not isolated from the internal circuits of the instrument.

Alarm
This instrument offers 14 different alarm modes. Each one can be selected by pressing the keypads on the front panel. The detailed descriptions are shown on Table 5.3, Page 11 and on Table 5.7, Page 16.

Sensor Placement
Proper sensor placement can eliminate many problems in a control system. The probe should be placed so that it can detect any temperature change with minimal thermal lag. In a process that requires fairly constant heat output, the probe should be placed close to the heater. In processes where the heat demand is variable, the probe should be closer to the work area. Some experimenting with probe location is often required to find this optimum position.

In a liquid process, addition of a stirrer will help to eliminate thermal lag. Since the thermocouple is basically a point measuring device, placing more than one thermocouple in parallel will provide an average temperature reading and produce better results in most air heated processes.

Proper sensor type is also a very important factor in obtaining precise measurements. The sensor must have the correct temperature range to meet the process requirements. In special processes the sensor might have to have different requirements such as leak-proof, anti-vibration, antiseptic, etc.

Standard sensor limits of error are ± 4 degrees F (±2 degrees C) or 0.75% of sensed temperature (half that for special) plus drift caused by improper protection or over-temperature occurance. This error is far greater than controller error and cannot be corrected at the sensor except by proper selection and replacement.

Front Panel Adjustments

Table 5.1 Keypad Operation

TOUCHKEYS	DESCRIPTION	FUNCTION
	Scroll Key	Advances the index display to the desired position. Indexes advanced continuously and cyclically by pressing this keypad.
	Up Key	Increases the parameter. (Set point or other)
	Down Key	Decreases the parameter. (Set point or other)
	Return Key	Resets the controller to its normal status. Also stops auto-tuning, output percentage monitoring and manual mode operation.
Press for 6 seconds	Long Scroll	Allows more parameters to be inspected or changed.
Press for 6 seconds	Long Return	1. Executes auto-tuning function. 2. Calibrates control when in calibration level.
Press and	Output Percentage Monitoring	Allows the set point display to indicate the control output value in percent.
Press and for 6 seconds	Manual Mode Execution	Allows the controller to enter the manual mode. This can be used if the sensor fails.

Table 5.2 Control Function and Display Flow Chart

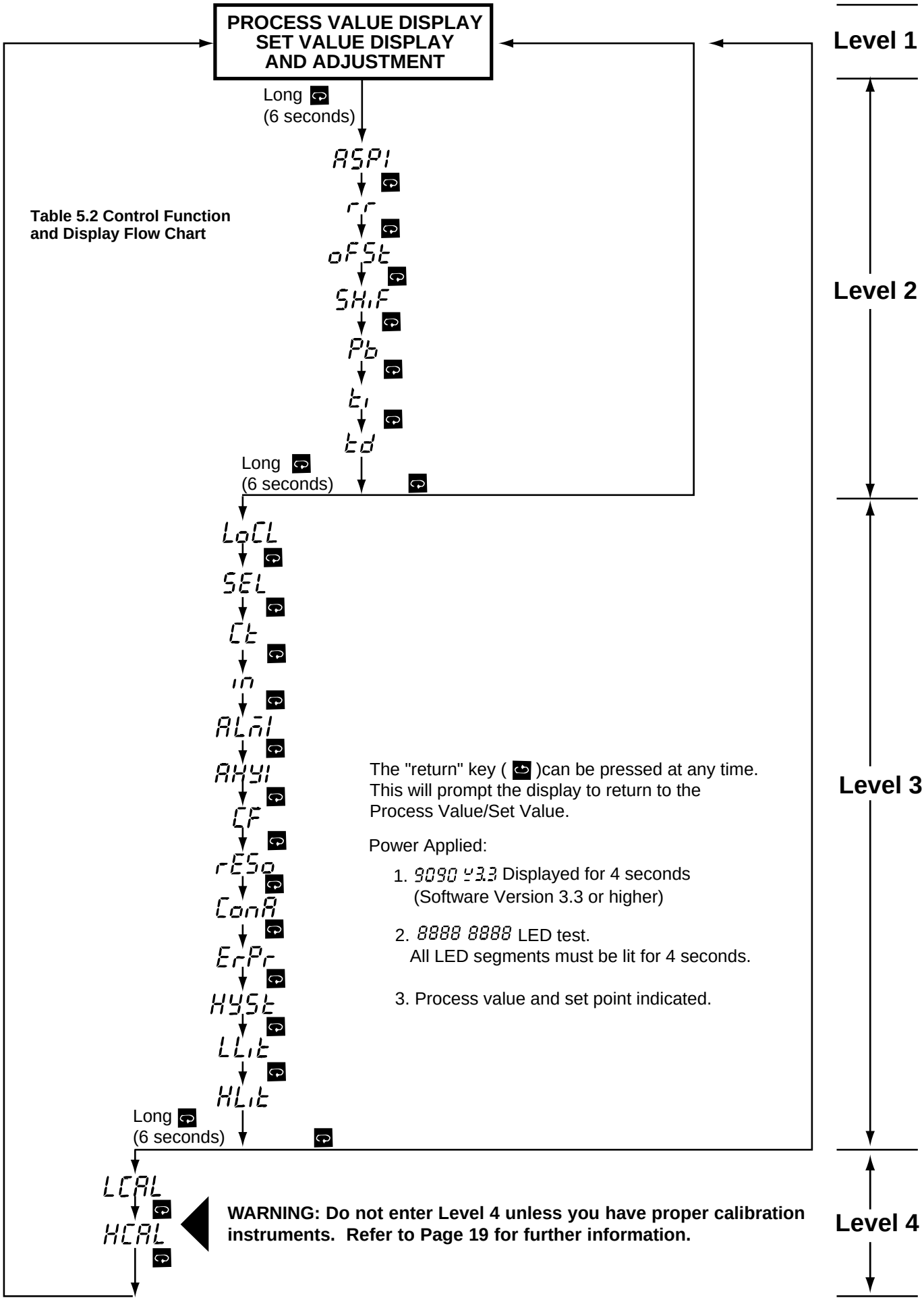

Table 5.3 Index Code (Menu) Descriptions:
(Do not disconnect power for at least 12 seconds after changing any control values. This allows the parameters to be entered into memory.)

NOTE: Further parameter definitions on pages 12 and 13

Index Code	Description —Adjusting Range	*Default Setting
SV	Set Point of control – Low Limit to High Limit Value	
ASP1	Alarm Set Point Value – Low limit to high limit (If ALAI=0,1,4 or 5) –0-3600 minutes (If ALAI=12 or 13) –Low limit minus set point high limit minus set point (IF ALAI=2, 3, 6 or 11)	18°F
rr	Ramp Rate for the process value. Limits an abrupt change of the process temperature. (Soft start) – 0-360°F 0-200°C/minute (If in=0-90) – 0-3600°/minute (If in = 10)	0.0
oFSt	Offset Value for Manual Reset Only used if integral is 0. – 0 to 100%	0.0
SHiF	Offset shift for process value – 199 count to 199 count See page 18 for instructions	0.0
Pb	Proportional Band 0 - 360°F For ON-OFF control set to 0 See instructions below.	18.0
ti	Integral (Reset) Time, TI – 0 to 3600 seconds	120 sec.
td	Derivative (Rate) Time, TD – 0 to 1000 seconds	30 sec.
LoCL	Local Mode – 0 to 1- 0: No Control Parameters can be changed. 1: Control Parameters can be changed.	1
StL	Following parameters will be upgraded to Level 1 – 0 to 7 0: None 1: ASP1 2: rr 3: oFSt 4: ASP1, rr 5: ASP1, oFSt 6: rr, oFSt 7: ASP1, rr, oFSt	0
Ct	Proportional Cycle Time, Heating & Cooling – 0 to 120 seconds Relay 3-32VDC Pulsed Voltage Linear Voltage, 4-20ma Current	 20 1 0
in	Input Mode Selection, IN – 0 to 10 0: J Type T/C 1: K Type T/C 2: T Type T/C 3: E Type T/C 4: B Type T/C 5: R Type T/C 6: S Type T/C 7: N Type T/C 8: PT100 DIN 9: PT100, JIS 10: Linear Voltage or Current	T/C 0 RTD 8 Linear 10
	NOTE: T/C - Close solder gap G5. RTD - Open G5 Located on P.C.B. A909F	

Index Code	Description —Adjusting Range	*Default Setting
	Alarm Mode Selection**	
ALAI	0: Process High Alarm 1: Process Low Alarm 2: Deviation High Alarm 3: Deviation Low Alarm 4: Inhibited Process High Alarm 5: Inhibited Process Low Alarm 6: Inhibited Deviation High Alarm 7: Inhibited Deviation Low Alarm 8: Outband Alarm 9: Inband Alarm 10: Inhibit Outband Alarm 11: Inhibit Inband Alarm 12: Alarm Relay OFF as Dwell Time Out 13: Alarm Relay ON as Dwell Time Out	2
AHYI	Hysteresis of Alarm – 0 to 20.0% of SPAN	0.5
CF	°C/°F Selection – 0 to 1 0:°F, 1:°C	0
rESO	Resolution Selection – 0 to 3 0: No Decimal Point Used 1: 1 Digit Decimal 2: 2 Digit Decimal 3: 3 Digit Decimal 2 and 3 can only be used for Linear Voltage or Current (IN=10)	0
ConA	Control Action – 0 to 1 0: Direct (cooling) Action 1: Reverse (heating) Action	1
ErPr	Error Protection – 0 to 3 0: Control OFF, Alarm OFF 1: Control OFF, Alarm ON 2: Control ON, Alarm OFF 3: Control ON, Alarm ON	1
hYSt	Hysteresis of ON-OFF control – 0 to 20.0% of SPAN	0.5%
LLit	Low Limit of Range (SPAN) Adjust for your process – See Instructions on Page 13.	–58
HLit	High Limit of Range (SPAN) Adjust for your process – See Instructions of Page 13	1832
LCAL	Low Calibration parameter – Refer to Section 6.	32
HCAL	High Calibration parameter – Refer to Section 6.	1112

ON-OFF CONTROL:
For on-off control action the following parameters must be set to zero (0): Proportional band, Integral, Derivative, Cycle time, Offset. The hysteresis (deadband) adjustment must now be used to determine the process oscillations from set point. Setting the hysteresis to a larger number will cause the contactor (or other equipment, to switch less often, but the process will oscillate farther from the set point.

*Factory set before shipping.

**Process alarms are at fixed temperature points.

Deviation alarms move with set point value.

For convenience, values used can be recorded on the next page.

------Long Scroll

Table 5.4 Parameter Chart

CONTROL NO. / DATE / PARAMETER			
SV SET POINT VALUE			
ASP1 ALARM SET POINT			
rr RAMP RATE			
oFSt OFFSET			
SHiF DISPLAY SHIFT			
Pb PROPORTIONAL BAND			
ti INTEGRAL			
td DERIVATIVE			
LoCL LOCK OUT			
SEL SELECT			
Ct CYCLE TIME			
in INPUT TYPE			
ALAI ALARM TYPE			
AHYI ALARM HYSTERESIS			
CF DEGREES C OR F			
rESo RESOLUTION			
ConA CONTROL ACTION			
ErPr ERROR PROTECTION			
HYSt CONTROL HYSTERESIS			
LLit LOW RANGE			
HLit HIGH RANGE			

-------- Long Scroll

PARAMETER DEFINITIONS:

PV - Process Value - This is the temperature (or other process variable) as measured at the sensor. This will indicate a value within the range between the low scale value (LLiE) and High scale value (HLiE). This indication will read an error code if the temperature (process variable) goes out of the preset span. Note items 4 and 5 of the troubleshooting guide on page 21 for the error code descriptions.

SV - Set Point Value - This parameter is the desired set point of the process. It can be adjusted within the range defined by the low scale (LLiE) and high scale value (HLiE). The span adjustments can be used to limit the set point setting of the controller.

ASP1 - Alarm Set Point Value or Dwell Time - This sets the point at which the alarm will energize if ALAI (alarm mode selection) is set for an alarm function. If ALAI is selected for the dwell timer function (setting 11 or 12), then this becomes the timer setting in minutes. The dwell timer starts counting when the process value reaches the set point value. Note page 17 for more information.

rr - Ramp Rate - This controls the heat-up and cool-down rate of the process. This setting is in degrees per minute. Note page 15 for more information.

oFST - Offset Value - This parameter is only functional if the integral time (Ti) is set to zero. The oFST than functions the same as manual reset to correct the process temperature to the set point temperature. If the process temperature stabilizes below the set point, set a positive amount of oFST. If the process temperature stabilizes above the set point, set a negative amount of oFST. Wait for the system to stabilize and make further adjustments as required. The number observed in this parameter can be ignored if you have a number greater than 1 entered in the integral setting (Ti).

ShiF - Display Shift - A value entered here will be added to or subtracted from the Process Value. This offset can be used as a correction factor if the sensor does not read the same temperature as the item being sensed. It can also be used to correct for calibration. Note page 18 for more information.

Pb, Ti and Td - PID Values - Proportional band (Pb), Integral (Ti) and Derivative (Td) time constants. These must be set as close as possible to the process application requirements. During auto-tuning, these parameters will be adjusted. Note pages 13, 14 and 15 for more information.

LoCL - Local Mode - Used to disable the up and down buttons to prevent tampering.

SEL - Select - Used to upgrade commonly used parameters to Level 1.

CT - Proportional Cycle Time - This sets the proportional cycle time for the control output. This should be set according to the type of output device used. For mechanical relays, cycle times of 15 to 20 seconds are used. For solid-state relays, set this adjustment to 1 or 0. For 4-20mA or other linear outputs, adjust to 0.

in - Input Mode Selection - This parameter is used to program the control to the type of input sensor used.

ALAI - Alarm Mode Selection - This adjustment sets the type of alarm (or dwell timer) to be used: deviation alarm, band alarm or process alarm. Refer to page 16 for more information.

(Continued on next page.)

AHY1 - Hysteresis of Alarm - The value entered here defines the deadband for the alarm. The alarm will not change state until the temperature is outside of the deadband.

CF - Degrees Selection - Sets the indication to degrees Celsius or Fahrenheit.

rESO - Display Resolution - This parameter is used to place a decimal point in the process and set point values. A two-place decimal point can only be used if the "in" adjustment is set to 10; ;linear voltage or current.

ConA - Control Action - This parameter selects heating (reverse) or cooling (direct) action for the control output.

ErPr - Error Protection - Sets the control and alarm output to be used in case of sensor failure.

hYSE - Hysteresis of On-Off Control - This parameter defines the deadband when on-off control is used and PID control has been disabled. For on-off control, set Pb, Ti and Td to 0. The output on a relay control will not change state until the temperature is outside of the deadband. Note page 13 for more information.

LLiE, HLiE - Low Scale/High Scale Range - The parameters are used to define the range (span) of the control. These should be set for the requirements and safety of your process. Refer to "Span Adjustment" on page 13 for further information.

Operating Procedure:

When the control has been wired, you can apply power. The display will indicate the model number, software version and LED lamp test. The temperature as measured at the sensor should now be indicated by the PV display. The thermocouple is wired in reverse if the indicated temperature decreases as the temperature at the thermocouple increases. The set point should be lowered to a value *(eg.* 30°F) so the heaters will not be energized. This will allow time to enter and make any adjustments of the parameters. The process will not heat-up.

Span Adjustment:

During this initial set-up, alarm points and any other settings can now be made. The low limit and high limit range settings (LLiE) and (HLiE) should be adjusted to your process. This sets the range (SPAN) of the control. The set point cannot be adjusted out of this range. For plastics processing and packaging, a span of 0-800°F is common. If oils are used, a lower span such as 0-300°F should be entered.

Automatic Tuning Procedure

When the settings have been made, you can return to the PV/SV level. Do not enter the calibration level. Adjust the required process temperature set point. The green "output" lamp should turn on indicating the heaters have been energized. You can auto-tune the control to the set point by depressing the return ( ) button for six seconds, then release. This matches the control's PID values to your process requirements. The lower decimal point will flash, indicating the control is in the auto-tune mode. No other adjustments can be made while the control is auto-tuning. During auto-tuning, the process will take approximately twenty-five percent longer to heat-up than it normally takes. After auto-tuning, the correct PID values will be entered into the control's memory.

Auto-tuning will not function if the control has been configured from PID to ON-OFF. For electric heating, PID is usually recommended.

Auto-tuning may not give satisfactory results and hold a close temperature on all applications. If this occurs, you can change the PID values manually using the three charts in Figure 5.1 on the top of the next page and Table 5.5 for a guide. It is recommended to change only one parameter at a time, so the results of that change can be clearly noted.

ON-OFF Control:

On-off control action is recommended when continuous cycling of the load cannot be used. Examples are mechanical solenoids, large contactors and valves. For on-off control, set the following parameters to zero: proportional band; integral; derivative and offset (oFSE). The hysteresis (hySE) adjustment is now used to set the deadband. The larger the hysteresis is set, the larger the deadband will be. A large deadband will cause the contactor (or other device) to switch less often, but the process will oscillate farther from the set point. This setting is measured in degrees.

Adjusting PID Parameters:

The PID parameters can be reviewed by operating the scroll key and noting whether the values are reasonable or not. Examine the controller's result. Modify the PID parameters, if necessary, according to Table 5.5 on page 15 until the control quality is acceptable.

PID Control

For various applications, the controller can be used as P control only (set integral = 0, derivative - 0); PI control (set derivative = 0), PD control (set integral = 0), and PID control.

Figure 5.3 on page 14 represents the response of a typical control system using various modes of control.

1.) P control results in a response showing a deviation (offset), a high overshoot and a moderate period of oscillation. In addition, a significant length of time is required before the system ceases to oscillate.

2.) PI control has no offset, but elimination of offset comes at the expense of higher overshoot, larger period of oscillation and a longer time required for oscillations to cease compared with other modes of control.

3.) PD control generally brings the system to steady state in the shortest time with the lease oscillation. However, it still has offset.

4.) PID control is essentially a compromise between the advantages of PI and PD control. Offset is eliminated by the integral action. The derivative action serves to lower offshoot and to eliminate some of the oscillation realized with PI control.

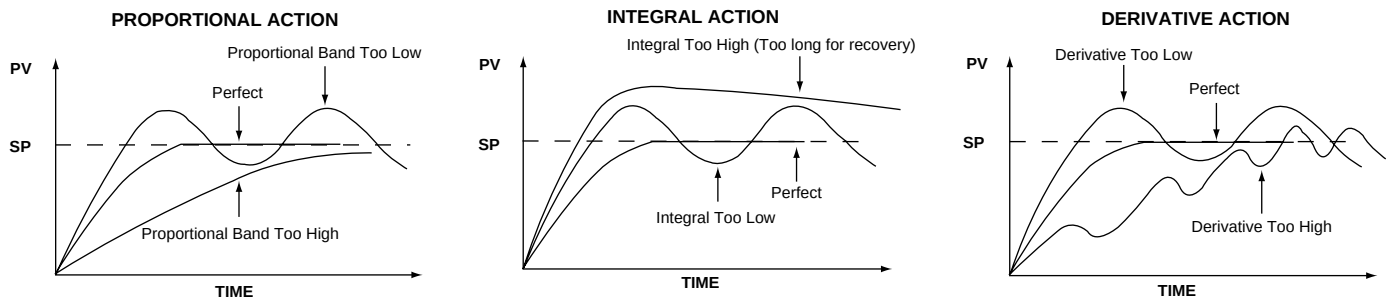

FIG 5.1 Effects of PID Adjustment on Process Response

The proportional band (Pb) is a temperature band expressed in degrees. When the controller is within this band, the time proprtioning functions are active.

Integral action (automatic reset) corrects for offset (load error) for load variations. Reset wind-up inhibition prevents integral action from occurring outside of the proportional band. Software antisaturation minimizes process oscillations when the load changes.

Derivative action is adjusted to match the response time of the process and to compensate the integral action. Correct adjustment provides power output compensation for process load variations. It also minimizes overshoot and oscillations at start up or in large process upsets. Refer to Figure 5.1 for additional adjustment instructions.

Manual Tuning Procedures:

For some systems it is difficult to execute automatic tuning or the automatic tuning results are not satisfactory. The following steps can then be used for initial tuning of a three-mode control:

Step 1: Adjust the integral and derivative values to 0. This inhibits the rate and reset action.

Step 2: Set an arbitrary value of proportional band and monitor the control results.

Step 3: If the original setting introduces a large process oscillation then gradually increase the proportional band until the oscillation disappears.

Step 4: If the original setting does not introduce process oscillations then gradually decrease the proportional band until steady cycling is observed. Record this important proportional band percentage (Pc).

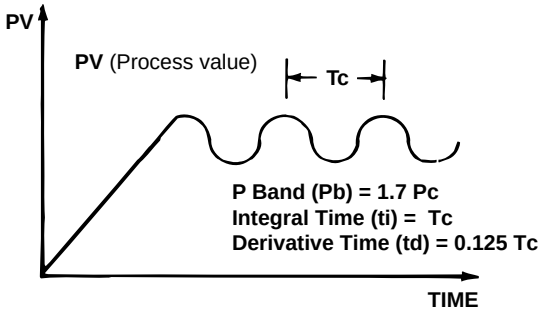

Fig. 5.2 Steady State Cycling

Step 5: Time the period of steady cycling. Record this critical period Tc. The PID parameters are determined as:

This method was developed by Ziegler and Nichols.

If you are unfamiliar with tuning PID Controllers, we suggest that you obtain and become familiar with the following reference material: *Tuning of Indusrial Control Systems* by A.R. Corripio ISBN: 1-55617-253-2-Q. Available from: ISA Publications and Training Aids, phone: 919-549-8411.

This method should be performed with a temperature chart recorder.

Fig. 5.3 Response of a Typical Control System Using Various Modes of Control

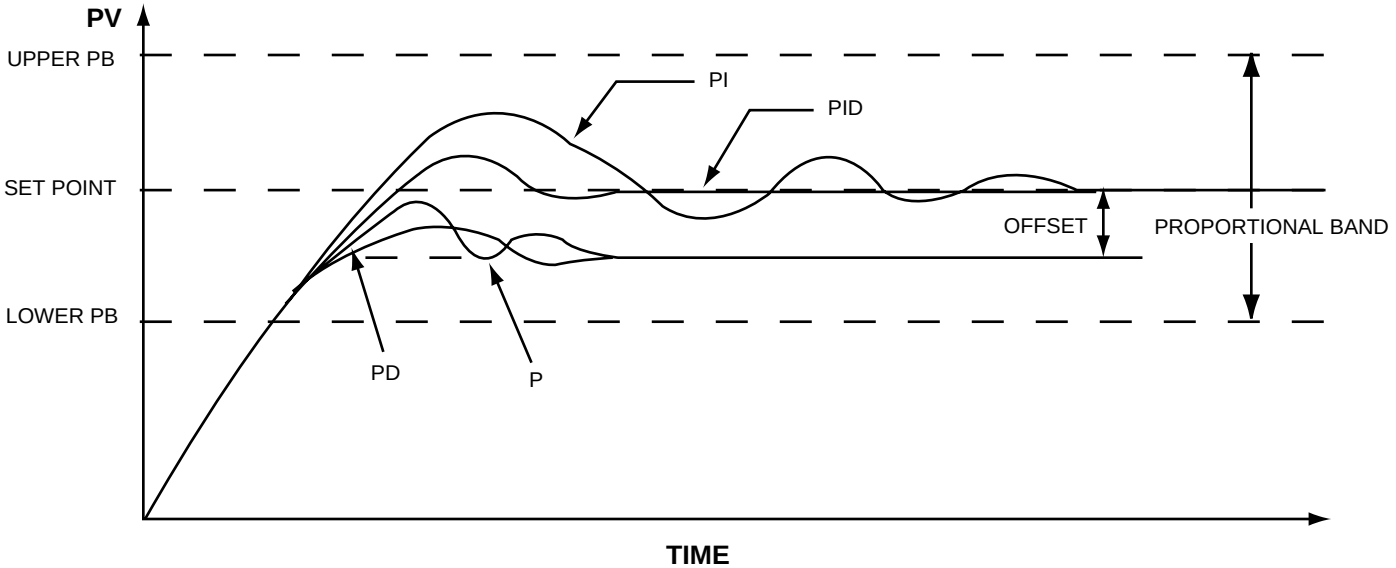

Table 5.5 Tuning Guide

ADJUSTMENT SEQUENCE:	SYMPTOM:	SOLUTION:
1.) Proportional Band	Slow Response	Decrease Proportional Band (Pb)
	High Overshoot or Oscillations	Increase Proportional Band (Pb)
2.) Integral Time (Reset)	Slow Response	Increase Reset (i.e. Decrease Integral Time)
	Instability or Oscillations	Decrease Reset (i.e. Increase Integral Time)
3.) Derivative Time (Rate)	Slow Response or Oscillations	Decrease Rate (i.e. Decrease Derivative Time)
	High Overshoot	Increase Rate (i.e. Increase Derivative Time)

RAMP RATE ADJUSTMENT

The purpose of this adjustment is to control the rate at which the process temperature can change. This feature would be used when rapid temperature changes could damage the product being controlled. When used, the ramp rate is in effect at all times, during heat-up, set point changes and cool-down.

The ramp rate (rr) is expressed in degrees/minute

EXAMPLE 1: The process temperature cannot change more than 5 degrees per minute.

Adjust rr = 5

EXAMPLE 2: The process temperature cannot change more than 60 degrees per hour.

Adjust rr = 1

The ramp rate is not functional if rr is set to zero.

Manual Mode Operation:

It is suggested to use Manual Mode (open loop operation) during the time the controller's sensor is not functioning and the control is unable to display the correct process value. This can also be used when automatic control (closed loop) is not possible or during the time required to test the characteristics of a process.

In order to enter the manual mode operation press both the "Scroll" key and the "Return" key for longer than 6 seconds and release. Now the control will display the output percentage with a range of –100% to 100%. A positive value for heating output percentage and a negative value for cooling output percentage. Press the UP or DOWN key to adjust the output percentage. Zero output percentage disables the heating output.

Table 5.6 Parameter Lockout

There are 5 levels of parameter security protection. They are shown below in the order of protection. Also refer to table 5.2 on page 10.		
LEVEL 1	LOCL = 0	No changes can be made
LEVEL 1	LOCL = 1	Only set point can be changed
LEVEL 2	LOCL = 1	Long scroll at Process Valve
LEVEL 3	LOCL = 1	Long scroll at td
LEVEL 4	LOCL = 1	Long scroll at HLit

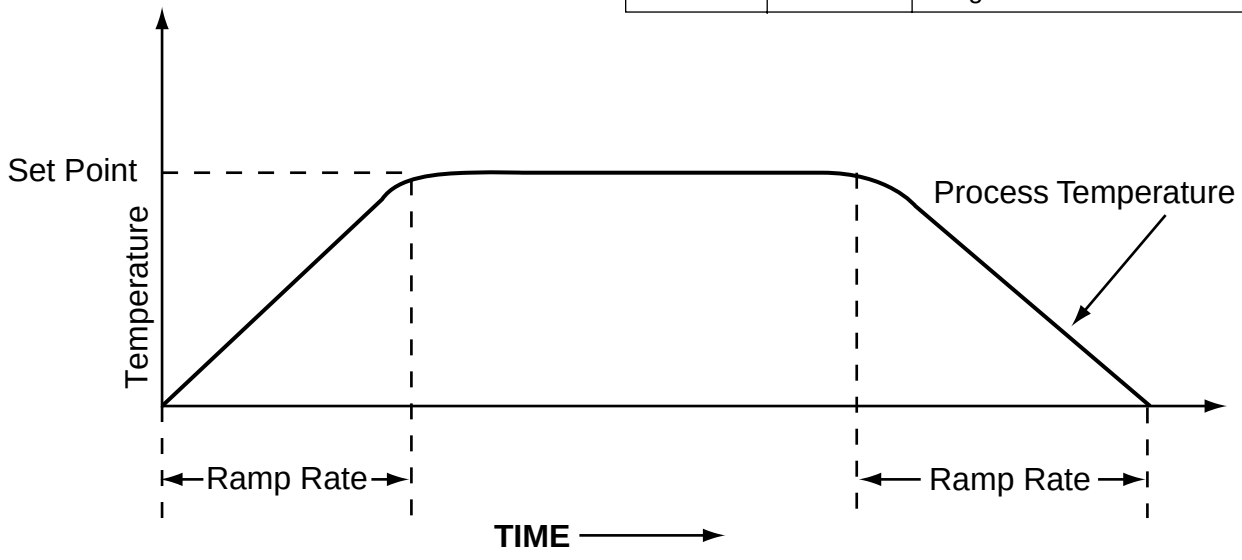

Figure 5.4 Ramp Rate Diagram

Table 5.7 Code Assignments and Description of Alarm Modes

ALARM **SV**= SET POINT VALUE ASP1 =ALARM SET POINT VALUE

ALA1= 0
PROCESS HIGH ALARM

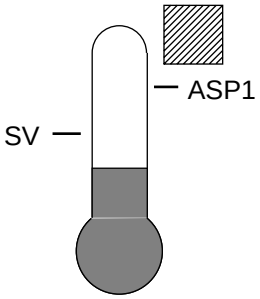

ALA1= 1
PROCESS LOW ALARM

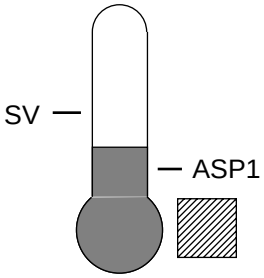

ALA1= 2
DEVIATION HIGH ALARM

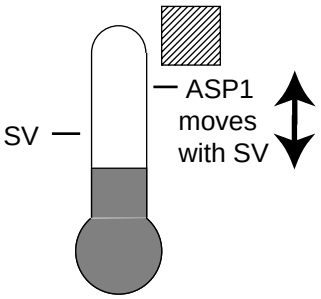

ALA1= 3
DEVIATION LOW ALARM

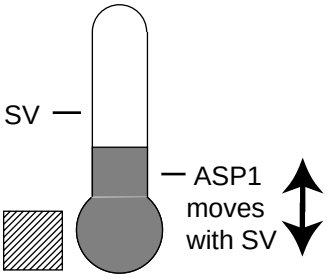

ALA1= 4
INHIBITED
PROCESS HIGH ALARM

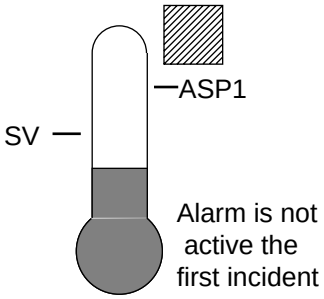

ALA1= 5
INHIBITED
PROCESS LOW ALARM

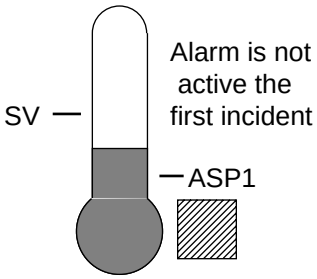

ALA1= 6
INHIBITED
DEVIATION HIGH ALARM

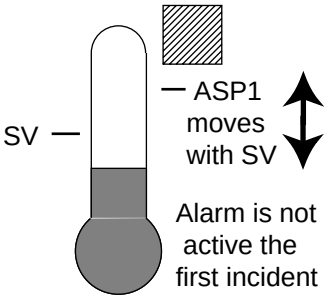

ALA1= 7
INHIBITED
DEVIATION LOW ALARM

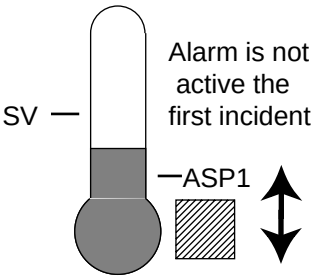

ALA1= 8
OUTBAND ALARM

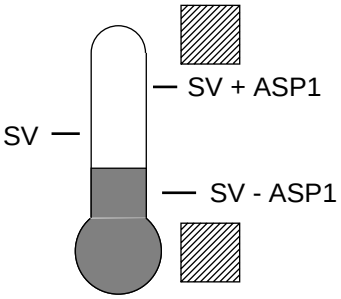

ALA1= 9
INBAND ALARM

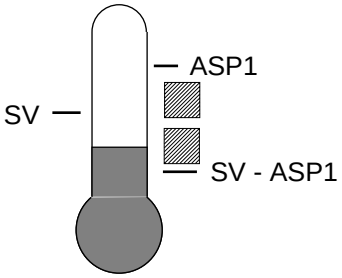

ALA1= 10
INHIBIT OUTBAND ALARM

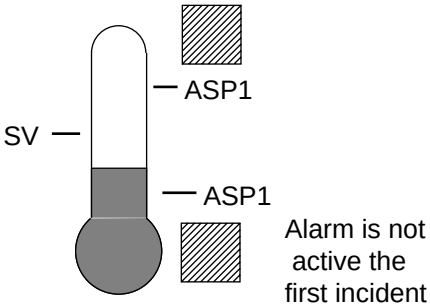

ALA1= 11
INHIBIT INBAND ALARM

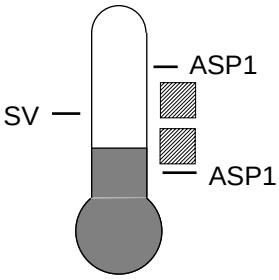

Alarm is not active the first incident

ALA1= 12
DWELL TIME OUT RELAY OFF
SOAK CONTROL

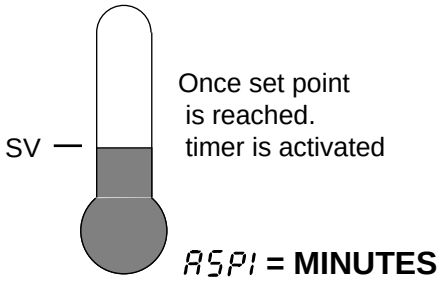

ASP1 = **MINUTES**

See Ramp Example on Page 17

ALA1= 13
DWELL TIME OUT RELAY ON
SOAK CONTROL

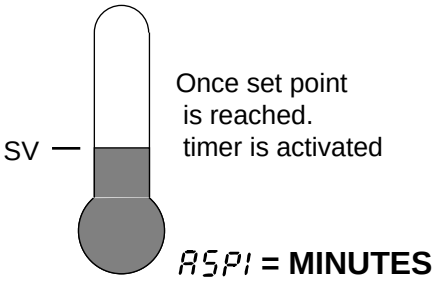

ASP1 = **MINUTES**

See Ramp Example on Page 17

Table 5.7 (Continued)

Descriptions of Alarms
Process High Alarm: Alarm is actuated whenever the process value rises above the alarm set point. Changing the control set point does not affect the process alarm trip point.
Process Low Alarm: Alarm is actuated whenever the process value falls below the alarm set point. Changing the control set point does not affect the process alarm trip point.
Deviation High Alarm: Alarm is actuated whenever the process value goes above the control set point by a predetermined (alarm Value) amount. Changing the control set point changes the alarm set point value maintaining the same deviation from the control set point.
Deviation Low Alarm: alarm is actuated whenever the process value falls below the control set point by a predetermined (alarm Value) amount. Changing the control set point changes the alarm set point value maintaining the same deviation from the control set pint. This alarm value is a negative number.

Inhibited alarms do not energize the alarm relay the first time the process temperature enters the alarm area. From the second time the process temperature enters the alarm area, the Inhibited Alarm offers ON as a normal alarm. For some systems, it is useful to bypass the first alarm section while the system is heating up.

Ramp and Soak Function

The ETR-9090 can be programmed as either a fixed set point controller or as a two segment ramp and soak control. The ramp-up rate is determined by the “rr” setting. This setting can be adjusted in the range of 0-360°F (200°C) per minute. The ramp rate function is disabled if the “rr” is set to 0. The soak function is accomplished by configuring the alarm relay to act as timer. To use this function, set ALA1 to 12. The alarm relay will be closed at start-up and it will stay closed until the process temperature has remained at the set point temperature for the time period set in ASP1. The ASP1 setting is in minutes. When the alarm relay opens, the process temperature will drop at an uncontrolled rate. The heater power must be wired in series from the main relay through the alarm relay. The control will now operate as a guaranteed soak control.

Please note the following example: The ramp rate “rr” is set to 5°F per minute. The ALA1 is set to 12, and the ASP1 is set to 30 (minutes). When the unit is turned on, the process will climb at 5°F per minute to the set point of 175°F. Once the set point has been reached, the timer will activate. After 30 minutes, the alarm relay will open. The process temperature falls. The process will repeat every time power has been switched off and on to the controller. See Diagram 1 at right.

Single Event Function

The single event function may be used to control external devices such as lights, bells or locks. It could also be used to alert the operator when a guaranteed soak time has been reached. To use this function, set ALA1 to 13. The alarm relay will now operate as a timer. The relay will be open at start-up. Once the set point temperature has been reached and the time period set in ASP1 has elapsed, the alarm relay will close. The relay will remain closed until power to the control has opened. The cycle will repeat each time the control is energized. Note Diagram No. 2 below.

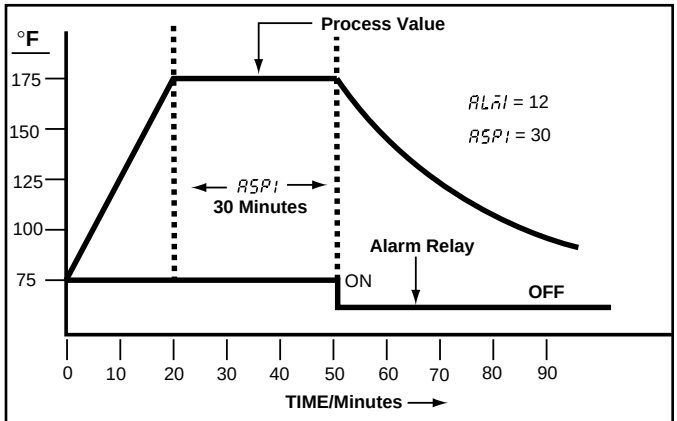

DIA. 1 Ramp and Soak

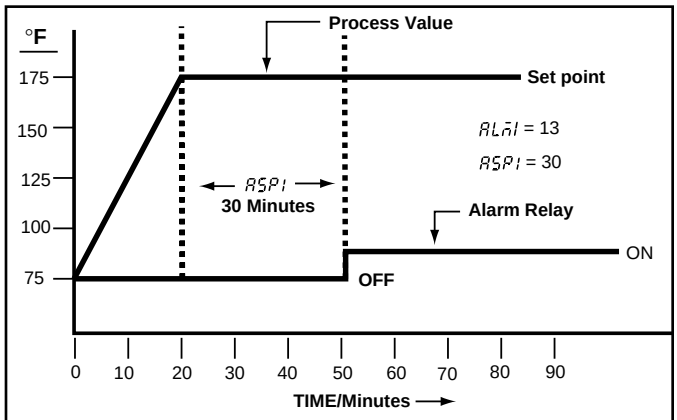

DIA. 2 Single Event

Display Shift

In certain applications it is desirable to shift the controllers indicated value from its actual value. This can be easily accomplished with this control by using the display shift function. Cycle the control to the SHiF parameter by using the “Scroll” pushbutton. The number you adjust here, either positive or negative, will be the amount that the process value (PV) will be shifted from the actual value. This amount will be the same across the entire range of the control. Note the example stated below.

The desired temperature at the part to be heated is 330 degrees F. In order to achieve that temperature, the controlling value or the temperature at the sensor must be 375 degrees F. Due to the design and position of the components of the system, the sensor could not be placed any closer to the work.

Thermal gradients (different temperatures) are common and necessary to an extent in any thermal system for heat to be transferred from one point to another.

The difference between the two temperatures is 45 degrees F. You should input –45 as to subtract 45 degrees from the actual process value (PV). Cycle the control back to the process value after making this adjustment.

DISPLAY BEFORE INPUT SHIFT.

DISPLAY AFTER INPUT SHIFT. ADJUST SV TO 330.

DISPLAY AFTER SHIFT AND SV ADJUSTMENT

Figure 5.5 Display Shift

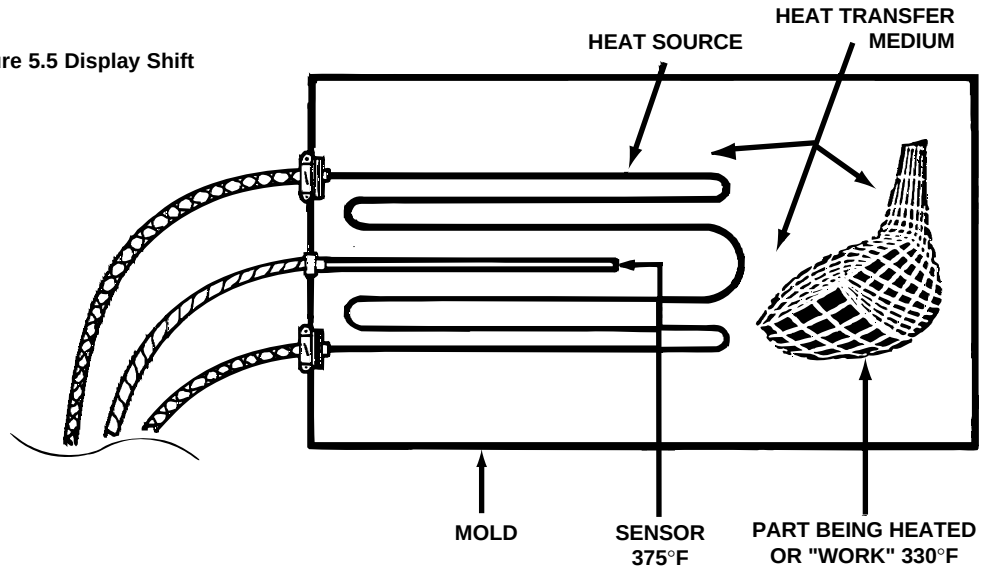

Section 6: CALIBRATION PROCEDURE

WARNING! Changing these values can make the control useless because it can be put out of calibration. Do not attempt to re-calibrate this temperature controller unless you have an adequate calibration instrument available. This must be used to simulate the sensor input.

The controller must operate under power for at least 45 minutes before starting the calibration procedure. This allows the internal components to reach the proper operating temperature. Connect the calibrating instrument to the ETR control and power leads.

STEP:

1.) Press and release the scroll key ( ) cycling through the parameters to make certain they are correct. Note the display flow chart on pages 10 & 11. Long scrolls (pressing the button for 6 seconds) must be used where indicated. Check parameters such as SH.F ,input type, degrees C or degrees F and resolution. The span of the control (LL.t) and (HL.t) must be extended out to their maximum values. Example: when using a type "J" thermocouple the low range value LL.t must be –58 degrees F (–50 deg. C) and the high range value HL.t must be 1832 degrees F (1000 deg. C). These values are listed in the chart on page two for other sensor types. The span of the control can be narrowed to your preferred range after the calibration procedure is completed.

2.) Press the scroll button again for a long scroll and the low calibration parameter (LCAL) will be displayed. Adjust the input simulator to the value indicated in the chart to the right. This value must also match the value in the controls display. Correct if necessary. Press the button for exactly 6 seconds to calibrate the low (or zero) calibration point.

3.) Press the scroll button again and the high calibration parameter (HCAL) will be displayed. Adjust the input simulator to the high calibration (span) value as indicated in the chart. Adjust the controller to the same value. Press the button for exactly 6 seconds to calibrate the high (or SPAN) calibration point.

4.) The calibration is now complete. Press the scroll button again and process value and setpoint value will appear.

Check intermediate values to test mid-range calibration accuracy. The procedure can be repeated again if the accuracy of the controller is not acceptable. Also you can easily add an arbitrary offset value if desired during the calibration procedure by changing the simulator value.

Calibration can be recorded in the accompanying chart.

CALIBRATION VALUES

	T/C Type 'J' SENSOR	RTD DIN SENSOR
LCAL	32°F	32°F
HCAL	1112°F	752°F

NOTE: The above values must be used for correct calibration.

LCAL **:Low Calibration parameter**

▼

HCAL **:High Calibration parameter**

▼

CALIBRATION RECORD

Control No.:	Date Calibrated:	Calibrated By:	Date Next Calibration Due:

Section 7: TROUBLESHOOTING

WARNING! THIS PROCEDURE REQUIRES ACCESS TO THE CIRCUITRY OF A LIVE POWER UNIT. DANGEROUS ACCIDENTAL CONTACT WITH LINE VOLTAGE IS POSSIBLE. ONLY QUALIFIED PERSONNEL ARE TO PERFORM THESE PROCEDURES. POTENTIALLY LETHAL VOLTAGES ARE PRESENT.

Experience has proven that many control problems are not caused by a defective instrument. See chart below and Table 7.1 on the next page for some of the other common causes of failures:

- Incorrect parameters entered in menu.
- Excessive electrical interference.
- Line wires are improperly connected.
- No voltage between line terminals.
- Incorrect voltage between line terminals.
- Connections to terminals are open, missing or loose.
- Thermocouple (or RTD) is open at tip.
- Thermocouple (or RTD) lead is broken.
- Shorted thermocouple (or RTD) leads.
- Short across terminals.
- Open or shorted heater circuit.
- Open coil in external contactor.
- Burned out line fuses.
- Burned out relay inside control.
- Defective solid-state relays.
- Defective line switches.
- Burned out contactor.
- Defective circuit breakers.

If the points listed above have been checked and the controller does not function, it is suggested that the instrument be returned for inspection.

Do not attempt to make repairs. Also, it is advisable to use adequate packing materials to prevent damage in shipment.

Return control to:
OGDEN MANUFACTURING COMPANY
ATTN: REPAIR DEPARTMENT
64 WEST SEEGERS ROAD
ARLINGTON HEIGHTS, IL 60005

NOTE:
Control can be removed from housing by pushing in latch located on bottom of bezel and pulling control from housing. Power must first be disconnected.

Table 7.1 Troubleshooting

Symptom	Probable Cause(s)	Solution(s)
1.) LED's will not light.	—No power to instrument.	—Check power line connections.
	—Power supply defective.	—Replace power supply board.
2.) Some segments of the display or LED lamps not lit or lit erroneously.	—LED display or LED Lamp defective.	—Replace LED display or LED lamp.
	—Related LED driver defective.	—Replace the related transistor or IC chip.
3.) Process Display shows: SbEr	—Sensor break error.	—Replace RTD or sensor. —Use manual mode operation.
4.) Process Display shows: LLEr	—Process value beyond the low range setpoint.	—Re-adjust LLit value.
5.) Process Display shows: HLEr	—Process value beyond the high range setpoint.	—Re-adjust HLit value.
6.) Process Display shows: AHEr	—Analog hybrid module damage.	—Replace module. Check for outside source of damage such as transient voltage spikes.
7.) Process Display shows: AtEr	—Incorrect operation of auto tune procedure. Prop. Band set to 0.	—Repeat procedure. Increase Prop. Band to a number larger than 0.
8.) Process Display shows: oPEr	—Manual mode is not allowable for an ON-OFF control system.	—Increase proportional band.
9.) Process Display shows: CSEr	—Check sum error, values in memory may have changed accidentally.	—Check and reconfigure the control parameters.
10.) Display Unstable	—Analog portion or A-D converter defective.	—Replace related components or board.
	—Thermocouple, RTD or sensor defective.	—Check thermocouple, RTD or sensor.
	—Intermittent connection of sensor wiring	—Check sensor wiring connections.
11.) Considerable error in temperature indication.	—Wrong sensor or thermocouple type. Wrong input mode selected.	—Check sensor or thermocouple type and if proper input mode was selected.
	—Analog portion A-D converter defective.	—Replace related components or board.
12.) Display goes in reverse direction (counts down scale as process warms).	—Reversed input wiring of sensor.	—Check and correct.
13.) No heat or output	—No heater power (output), incorrect output device used.	—Check output wiring and output device.
	—Output device defective.	—Replace output device.
	—Open fuse outside of the instrument.	—Replace output fuse.
14.) Heat or output stays on but indicator reads normal.	—Output device shorted, or power service shorted.	—Check and replace.
15.) Control abnormal or operation incorrect.	—CPU or EEPROM (non-volative memory) defective. Key switch defective.	—Check and replace.
	—Operation of control incorrect.	—Read the operation procedure carefully.
16.) Display blinks, entered values change by themselves.	—Electromagnetic interference (EMI), or Radio Frequency Interface (RFI).	—Suppress arcing contacts in system to eliminate high voltage spike sources. Separate sensor and controller wiring from "dirty" power lines, ground heaters.
	—EEPROM defective.	—Replace EEPROM.